Sovitron Interior Pvt.Ltd.

Model Name	Geniso Traffle 2X2 /DLTP2T2DRD-30
Description	Panel light

Technical description	
Dimension	L=595mm W=595mm, H=100mm
Frame	Aluminium
Color Tempertaure	4000K
Power	30W
Total Luminous Flux	3000 lm
Efficacy	100 lm/W
IP rating	50
Color Rendering	≥80
Mounting	Recessed
Diffuser/Lens	PMMA Diffuser
Dimming	NON-Dimmable
Operating Voltage	220-240 VAC
Standard Lifetime	L70 minimum at 50,000 burning hours

Remarks:-

Image

Dimension diagram

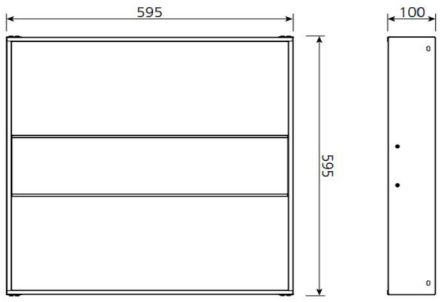

Address: Plot #7 Saroorpur-Nangla Industrial Area,Ballabhgarh-Sohna Road,Faridabad-121005
Email: info@sovitron.com